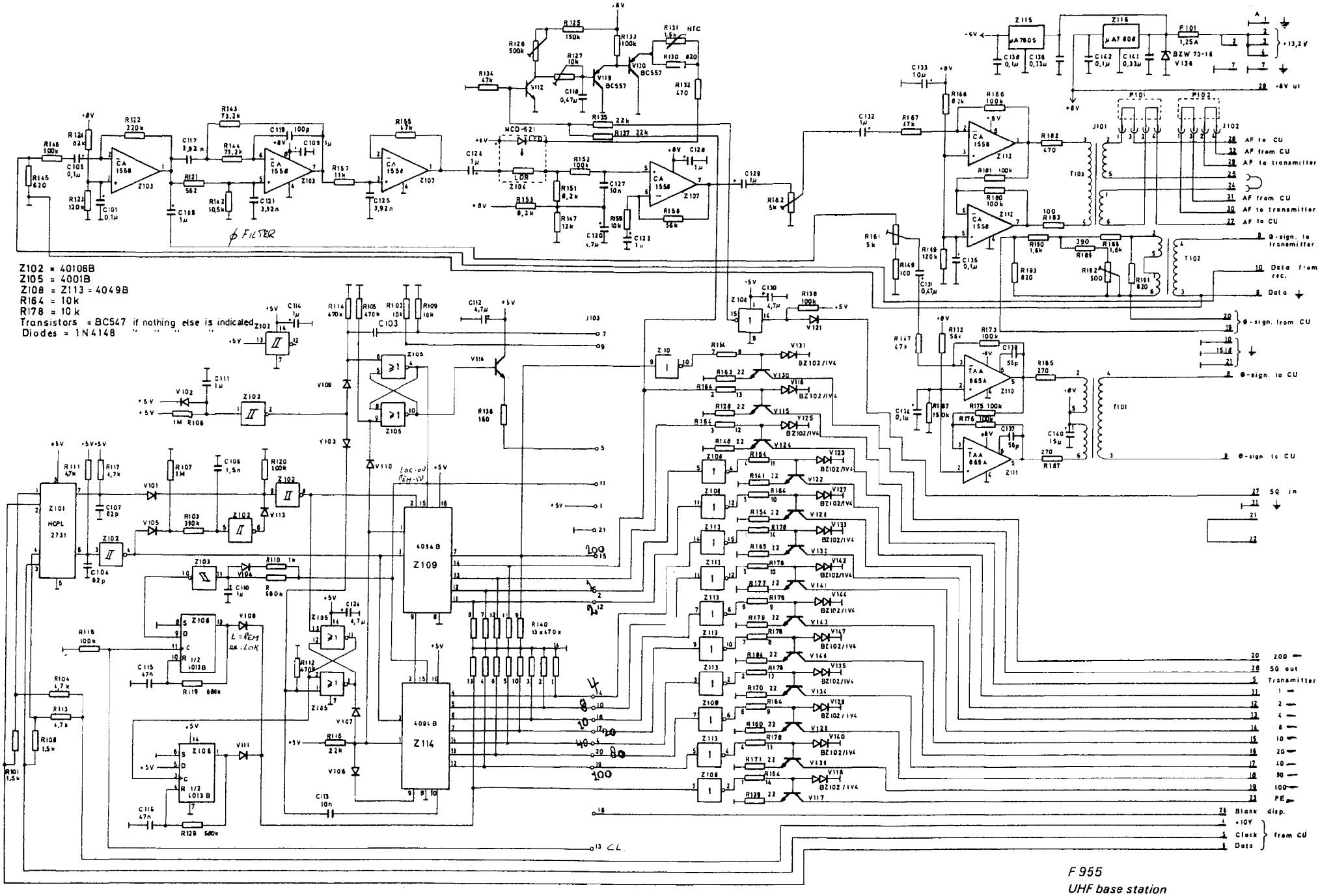
Z102 = 40106B
Z105 = 4001B
Z108 = Z113 = 4049B
R164 = 10k
R178 = 10k
Transistors = BC547 if nothing else is indicated
Diodes = 1N4148
φ FILTER
AF to CU
AF from CU
AF to transmitter
AF from CU
AF to transmitter
AF to CU
φ-sign. to transmitter
Data from rec.
Data
φ-sign. from CU
φ-sign. to CU
φ-sign to CU
SQ in
SQ out
Transmitter
Blank disp.
+10V
Clock
Data
from CU
F 955
UHF base station
INTERFACE UNIT
MAIN BOARD
Circuit diagram
ERICSSON
Ericsson Radio Systems

70

2 .H	F/MTM L A	ERA 1911 - RR-198L
Flemming Kjell Walther		82-09-29 A
Kanalavkodarkort		Channel det.board
Anpassningsenhet för F955		Interface unit F955

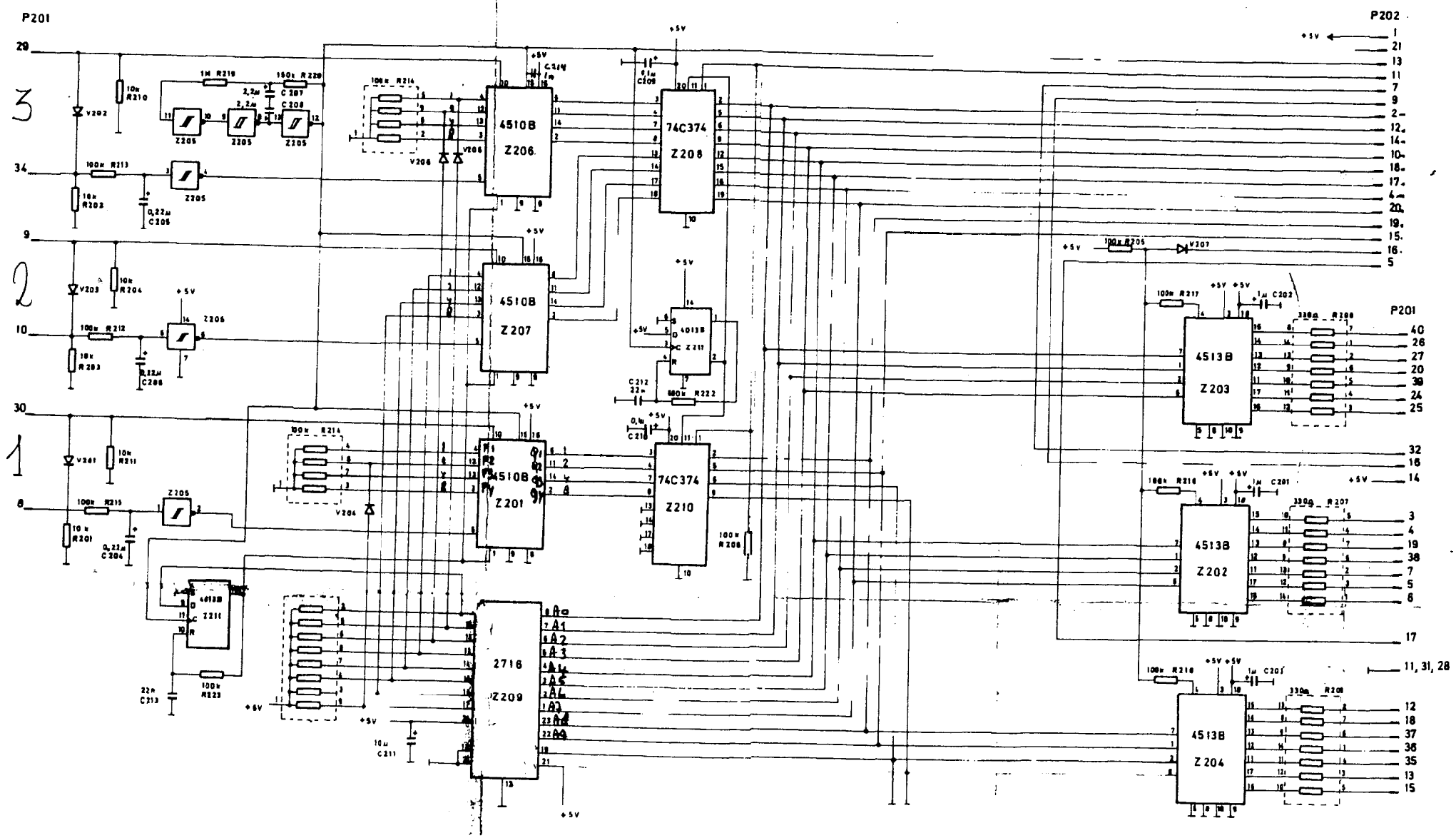

71